APPENDIX C

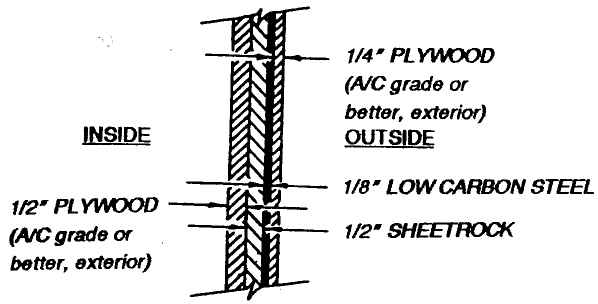

Sketch of laminate construction for container or compartment for electric blasting caps use, as illustrated in Appendix A, B, and E.

APPENDIX D

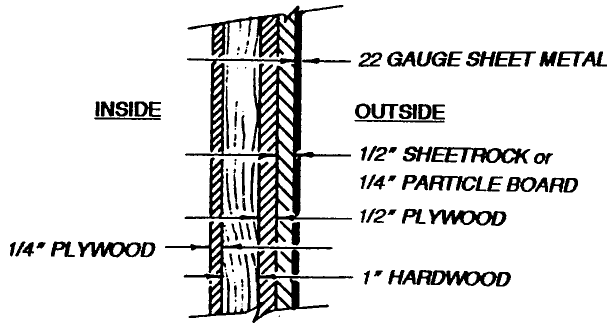

Sketch of laminate construction for container or compartment for electric blasting caps; restricted to use as illustrated in Appendix A.

[Diagrams: Courtesy of IME]

APPENDIX E

PORTABLE WHEELED TRAILERS

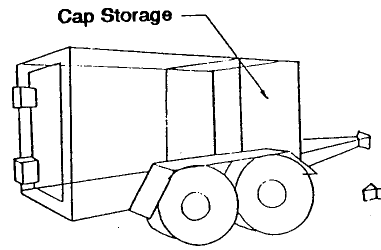

Figure 1

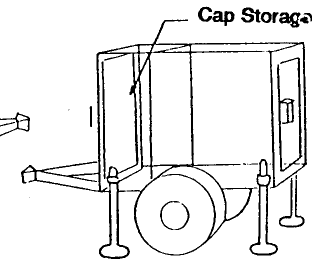

Figure 3

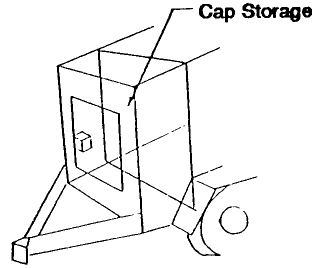

Figure 2

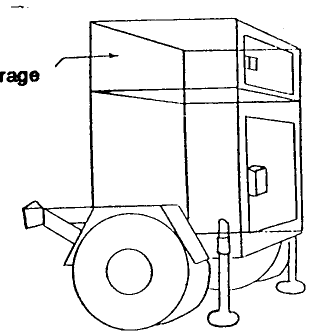

Figure 4